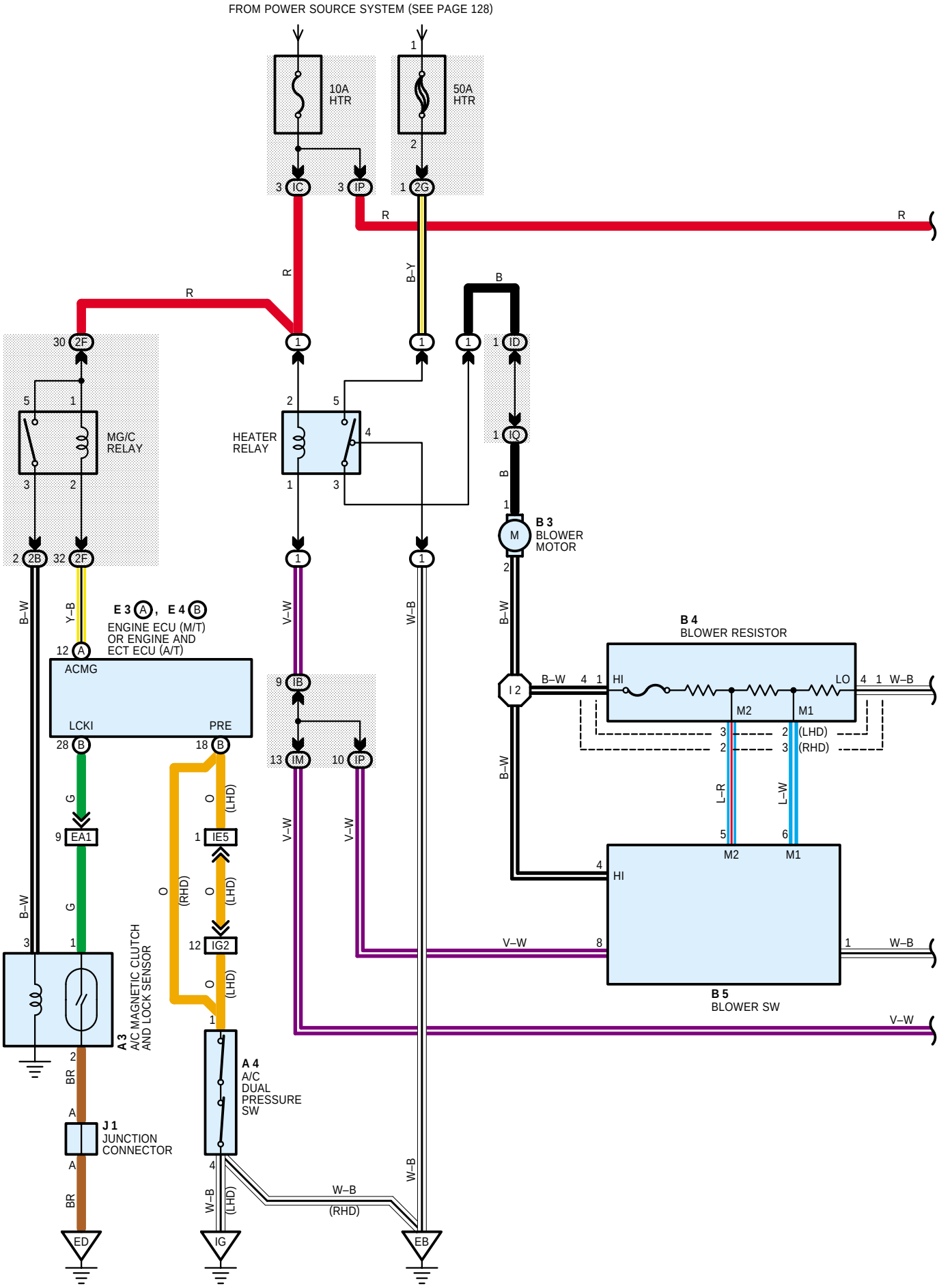
FROM POWER SOURCE SYSTEM (SEE PAGE 128)
10A HTR
50A HTR
MG/C RELAY
HEATER RELAY
B 3 BLOWER MOTOR
B 4 BLOWER RESISTOR
E 3 A, E 4 B
ENGINE ECU (M/T) OR ENGINE AND ECT ECU (A/T)
ACMG
LCKI
PRE
A 3 A/C MAGNETIC CLUTCH AND LOCK SENSOR
A 4 A/C DUAL PRESSURE SW
J 1 JUNCTION CONNECTOR
B 5 BLOWER SW
HI
LO
M2
M1
(LHD)
(RHD)
ED
IG
EB

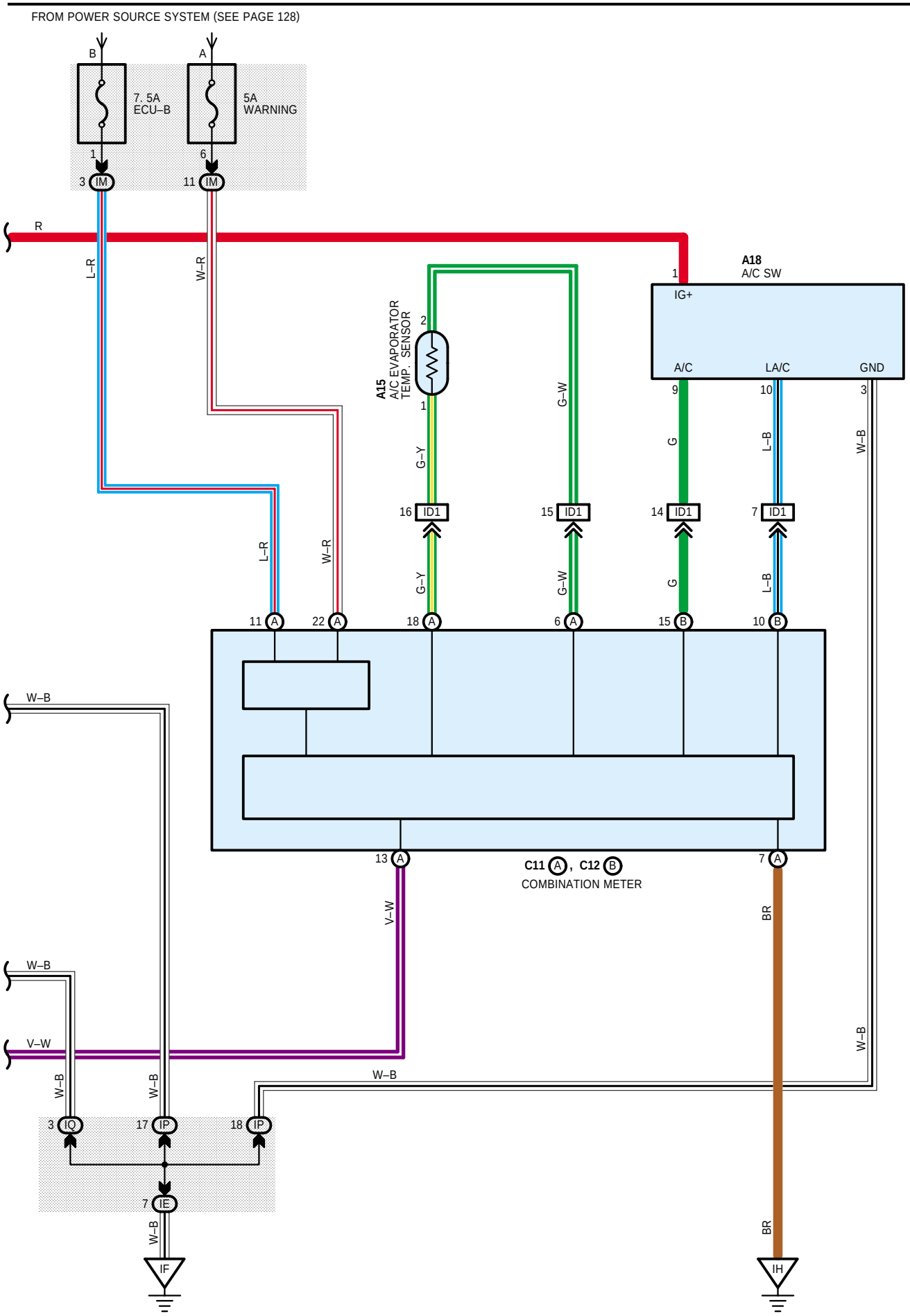
FROM POWER SOURCE SYSTEM (SEE PAGE 128)
B
A
7. 5A
ECU–B
5A
WARNING
1
6
3 IM
11 IM
R
L–R
W–R
A18
A/C SW
1
IG+
A/C
LA/C
GND
9
10
3
A15
A/C EVAPORATOR
TEMP. SENSOR
2
1
G–Y
G–W
G
L–B
W–B
16 ID1
15 ID1
14 ID1
7 ID1
L–R
W–R
G–Y
G–W
G
L–B
11 A
22 A
18 A
6 A
15 B
10 B
W–B
13 A
7 A
C11 A , C12 B
COMBINATION METER
V–W
BR
W–B
V–W
W–B
W–B
W–B
W–B
3 IQ
17 IP
18 IP
7 IE
W–B
BR
IF
IH